High voltage fuse-links

High voltage high-breaking capacity VV fuse-links

General information
ETI HV fuse-links named VV THERMO are designed to protect devices in switch-gears and other equipment (distribution transformers, capacitors, motors) from thermal and dynamic effects of shortcircuits and overcurrents. Time-current characteristics correspond to standard IEC 60282-1, item 3.3.3. Back-up fuse.
They are suitable for installation in:
- indoor and outdoor switchgear
- gas (SF6)-insulated enclosures
- special service conditions (different from normal conditions, described in item 2.1. of standard IEC 60282-1)

The most significant features of ETI high voltage fuses:
- Low temperature rise because of low power dissipation
- High breaking capacity 50 kA
- Possibility of three different striker pin forces: 80 N and 120 N (with integrated temperature dependent limiter) and 50 N.
- Reliable sealing system against humidity irruption
- Low switching voltages
- Upon a request, fuse links can be supplied into no-standard dimensions

Overview of standard and non-standard dimensions

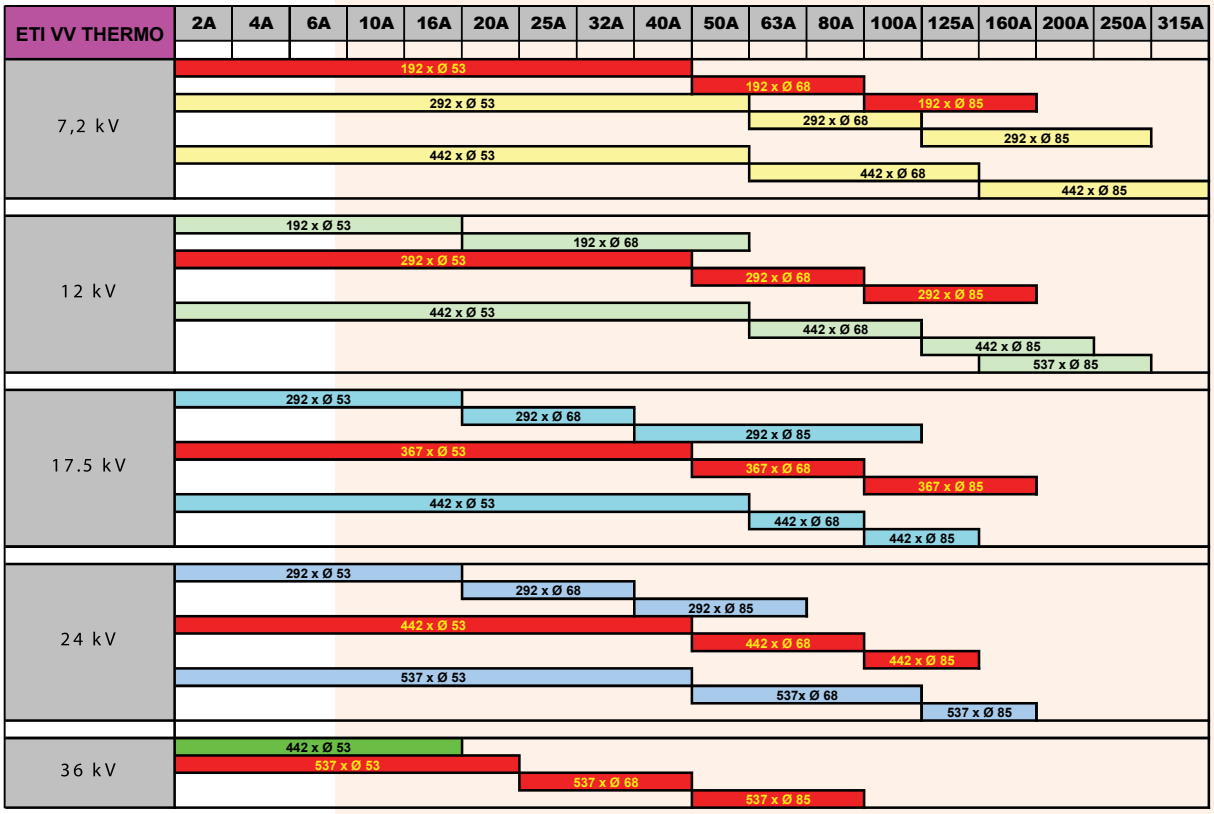

Technical data on page 845

Standards

ETI VV (Medium Voltage) fuse-links comply with the following standards and specifications:

- IEC 60282-1, Sixth edition 11/2005 "Current limiting fuses"
- DIN 43625 "Hochspannungs-Sicherungen Nennspannung 3,6 bis 36kV"
- "VDE 0670 T402, Wechselstromschaltgeraete fuer Spannungen ueber 1kV, Auswahl von strombegrenzenden Sicherungseinsaetzen fuer Transformatorstromkreise" / IEC 60787 "Application guide for the selection of high-voltage current limiting fuse-links for transformer circuits"
- IEC 60644 "Specification for high-voltage fuse-links for motor circuit applications"
- IEC 60549 "High-voltage fuses for external protection of power capacitors"

Certificates, Test reports

- CESI (Milan, Italy) certificate for 12kV, 17.5kV and 24kV
- KERI (Chang Wong, S.Korea) certificate for 7.2kV and 24kV
- ICMET (Craiova, Romania) test report for 36kV
- Test reports for 25kV, 38.5kV, 40.5kV and 42kV versions

Construction:

ETI high voltage fuses are designed to assure stable and reliable characteristics. The glazed porcelain tube (made in ETI own ceramic factory) is extremely high mechanical and thermal resistant.
Galvanically protected contact caps made of electrolytic copper are nickel - or upon customer request silver plated. Caps are rolled by pressing into the groove of the tube. The tightness of this connection is assured by a special seal resistant to ageing and high temperatures.
The design and method of production of the melting elements ensures precisely tolerances and stable time/current characteristics. Fuse elements are wounded on a ceramic carrier and electrically welded on a special copper strips.
The inside of the tube is filled with quartz sand with an exactly determined granulation and chemical structure. The sand guarantees good and reliable extinguishing of the electric arc.
An important element in the fuse-link construction is also the striker system. Part of that system is temperature sensitive element, which reacts in cases of temperature increasing of the fuse-link due to various reasons. The reaction temperature is set to approximately 250°C on fuse tube surface. The system reacts in such a way that short time overloads do not cause the fuse to interrupt the circuit unnecessarily. Only when inadmissible values of surrounding temperatures are exceeded, the fuse open the switch via the striker pin. Because of these characteristics, ETI "thermal" striker pin is convenient for the protection of the fuse enclosure of SF6 switchgears which requires additional protection features against inadmissible temperatures of certain switchgear parts.

Striker pin Type description, rated voltage 7,2 kV example:

- **VVC; 50N striker force (C mark).**
- **VVT-D; Temperature limiter (VVT), 80N striker force (D mark).**
- **VVT-E; Temperature limiter (VVT),120N striker force (E mark).**

Technical data on page 845

Ordering Code Numbers

rated voltage U_n [kV]	Dimension "e" according to DIN and IEC (mm)	rated current [A]	VVC Striker type 50N	VVT-D Striker type 80N THERMO	VVT-E Striker type 120N THERMO	Tube diameter "d" (mm)	weight [kg]
3/7.2	192	2 A	004225003	004226003	004227003	53	1.1
		4 A	004225004	004226004	004227004		
		6 A	004225005	004226005	004227005		
		10 A	004225006	004226006	004227006		
		16 A	004225007	004226007	004227007		
		20 A	004225008	004226008	004227008		
		25 A	004225009	004226009	004227009		
		32 A	004225010	004226010	004227010		
		40 A	004225011	004226011	004227011		
		50A	004225012	004226012	004227012	68	1.7
		63 A	004225013	004226013	004227013		
		80 A	004225014	004226014	004227014		
		100 A	004225015	004226015	004227015	85	2.7
		125A	004225016	004226016	004227016		
		160 A	004225017	004226017	004227017		
	292	2A	004225503	004226503	004227503	53	1.6
		4A	004225504	004226504	004227504		
		6 A	004225505	004226505	004227505		
		10 A	004225506	004226506	004227506		
		16 A	004225507	004226507	004227507		
		20 A	004225508	004226508	004227508		
		25 A	004225509	004226509	004227509		
		32 A	004225510	004226510	004227510		
		40 A	004225511	004226511	004227511		
		50 A	004225512	004226512	004227512		
		63 A	004225513	004226513	004227513	68	2.8
		80A	004225514	004226514	004227514		
		100 A	004225515	004226515	004227515		
		125A	004225516	004226516	004227516	85	4.0
		160 A	004225517	004226517	004227517		
		200 A	004225518	004226518	004227518		
		250 A	004225519	004226519	004227519		
	442	2A	004225603	004226603	004227603	68	3.9
		4A	004225604	004226604	004227604		
		6A	004225605	004226605	004227605		
		10A	004225606	004226606	004227606		
		16A	004225607	004226607	004227607		
		20A	004225608	004226608	004227608		
		25A	004225609	004226609	004227609		
		32A	004225610	004226610	004227610		
		40A	004225611	004226611	004227611		
		50A	004225612	004226612	004227612		
		63 A	004225613	004226613	004227613		
		80A	004225614	004226614	004227614		
		100 A	004225615	004226615	004227615		
		125A	004225616	004226616	004227616		
		160 A	004225617	004226617	004227617	85	5.8
		200 A	004225618	004226618	004227618		
		250 A	004225619	004226619	004227619		
		315 A	004225620	004226620	004227620		

Note 1: Other ratings and dimensions can be supplied by customer request. For particular applications, please contact ETI technical team.
Note 2: Orange colored types according to IEC 60282-1 dimensions.

Technical data on page 845

Ordering Code Numbers

rated voltage U_n [kV]	Dimension "e" according to DIN and IEC (mm)	rated current [A]	VVC Striker type 50N	VVT-D Striker type 80N THERMO	VVT-E Striker type 120N THERMO	Tube diameter "d" (mm)	weight [kg]
6/12	192	2 A	004235103	004236103	004237103	53	1.1
		4 A	004235104	004236104	004237104		
		6 A	004235105	004236105	004237105		
		10 A	004235106	004236106	004237106		
		16 A	004235107	004236107	004237107		
		20 A	004235108	004236108	004237108	68	1.7
		25 A	004235109	004236109	004237109		
		32 A	004235110	004236110	004237110		
		40 A	004235111	004236111	004237111		
		50A	004235112	004236112	004237112		
	292	2 A	004235003	004236003	004237003	53	1.6
		4 A	004235004	004236004	004237004		
		6 A	004235005	004236005	004237005		
		10 A	004235006	004236006	004237006		
		16 A	004235007	004236007	004237007		
		20 A	004235008	004236008	004237008		
		25 A	004235009	004236009	004237009		
		32 A	004235010	004236010	004237010		
		40 A	004235011	004236011	004237011		
		50 A	004235012	004236012	004237012	68	2.8
		63 A	004235013	004236013	004237013		
		80 A	004235014	004236014	004237014		
		100 A	004235015	004236015	004237015	85	4.0
		125 A	004235016	004236016	004237016		
		160 A	004235017	004236017	004237017		
	442	2 A	004235503	004236503	004237503	53	2.3
		4 A	004235504	004236504	004237504		
		6 A	004235505	004236505	004237505		
		10 A	004235506	004236506	004237506		
		16 A	004235507	004236507	004237507		
		20 A	004235508	004236508	004237508		
		25 A	004235509	004236509	004237509		
		32 A	004235510	004236510	004237510		
		40 A	004235511	004236511	004237511		
		50 A	004235512	004236512	004237512		
		63 A	004235513	004236513	004237513	68	3.9
		80 A	004235514	004236514	004237514		
		100 A	004235515	004236515	004237515		
		125 A	004235516	004236516	004237516	85	5.8
		160 A	004235517	004236517	004237517		
		200 A	004235518	004236518	004237518		
	537	160 A	004235617	004236617	004237617	85	7.0
		200 A	004235618	004236618	004237618		
		250 A	004235619	004236619	004237619		

Note 1: Other ratings and dimensions can be supplied by customer request. For particular applications, please contact ETI technical team.
Note 2: Orange colored types according to IEC 60282-1 dimensions.

Technical data on page 846

Ordering Code Numbers

rated voltage U_n [kV]	Dimension "e" according to DIN and IEC (mm)	rated current [A]	VVC Striker type 50N	VVT-D Striker type 80N THERMO	VVT-E Striker type 120N THERMO	Tube diameter "d" (mm)	weight [kg]
10/17,5	292	2 A	004245103	004246103	004247103	53	1.6
		4 A	004245104	004246104	004247104		
		6 A	004245105	004246105	004247105		
		10 A	004245106	004246106	004247106		
		16 A	004245107	004246107	004247107		
		20 A	004245108	004246108	004247108	68	2.8
		25 A	004245109	004246109	004247109		
		32 A	004245110	004246110	004247110		
		40 A	004245111	004246111	004247111	85	4.0
		50A	004245112	004246112	004247112		
		63 A	004245113	004246113	004247113		
		80 A	004245114	004246114	004247114		
		100A	004245115	004246115	004247115		
	367	2 A	004245003	004246003	004247003	53	1.9
		4 A	004245004	004246004	004247004		
		6 A	004245005	004246005	004247005		
		10 A	004245006	004246006	004247006		
		16 A	004245007	004246007	004247007		
		20 A	004245008	004246008	004247008		
		25 A	004245009	004246009	004247009		
		32 A	004245010	004246010	004247010		
		40 A	004245011	004246011	004247011		
		50 A	004245012	004246012	004247012	68	3.1
		63 A	004245013	004246013	004247013		
		80A	004245014	004246014	004247014		
		100 A	004245015	004246015	004247015	85	4.6
		125A	004245016	004246016	004247016		
		160 A	004245017	004246017	004247017		
	442	2 A	004245503	004246503	004247503	53	2.3
		4 A	004245504	004246504	004247504		
		6 A	004245505	004246505	004247505		
		10 A	004245506	004246506	004247506		
		16 A	004245507	004246507	004247507		
		20 A	004245508	004246508	004247508		
		25 A	004245509	004246509	004247509		
		32 A	004245510	004246510	004247510		
		40 A	004245511	004246511	004247511		
		50 A	004245512	004246512	004247512		
		63 A	004245513	004246513	004247513	68	3.9
		80A	004245514	004246514	004247514		
		100 A	004245515	004246515	004247515	85	5.8
		125A	004245516	004246516	004247516		

Note 1: Other ratings and dimensions can be supplied by customer request. For particular applications, please contact ETI technical team.
Note 2: Orange colored types according to IEC 60282-1 dimensions.

Technical data on page 847

Ordering Code Numbers

rated voltage U_n [kV]	Dimension "e" according to DIN and IEC (mm)	rated current [A]	VVC Striker type 50N	VVT-D Striker type 80N THERMO	VVT-E Striker type 120N THERMO	Tube diameter "d" (mm)	weight [kg]
10/24	292	2 A	004255103	004256103	004257103	53	1.6
		4 A	004255104	004256104	004257104		
		6 A	004255105	004256105	004257105		
		10 A	004255106	004256106	004257106		
		16 A	004255107	004256107	004257107		
		20 A	004255108	004256108	004257108	68	2.8
		25 A	004255109	004256109	004257109		
		32 A	004255110	004256110	004257110		
		40 A	004255111	004256111	004257111	85	4.0
		50A	004255112	004256112	004257112		
		63 A	004255113	004256113	004257113		
	442	2 A	004255003	004256003	004257003	53	2.3
		4 A	004255004	004256004	004257004		
		6 A	004255005	004256005	004257005		
		10 A	004255006	004256006	004257006		
		16 A	004255007	004256007	004257007		
		20 A	004255008	004256008	004257008		
		25 A	004255009	004256009	004257009		
		32 A	004255010	004256010	004257010		
		40 A	004255011	004256011	004257011		
		50 A	004255012	004256012	004257012	68	3.9
		63 A	004255013	004256013	004257013		
		80A	004255014	004256014	004257014		
		100 A	004255015	004256015	004257015	85	5.8
		125A	004255016	004256016	004257016		
	537	2 A	004255503	004256503	004257503	53	2.8
		4 A	004255504	004256504	004257504		
		6 A	004255505	004256505	004257505		
		10 A	004255506	004256506	004257506		
		16 A	004255507	004256507	004257507		
		20 A	004255508	004256508	004257508		
		25 A	004255509	004256509	004257509		
		32 A	004255510	004256510	004257510		
		40 A	004255511	004256511	004257511		
		50 A	004255512	004256512	004257512	68	4.7
		63 A	004255513	004256513	004257513		
		80A	004255514	004256514	004257514		
		100 A	004255515	004256515	004257515		
		125 A	004255516	004256516	004257516	85	7.0
		160 A	004255517	004256517	004257517		

Note 1: Other ratings and dimensions can be supplied by customer request. For particular applications, please contact ETI technical team.
Note 2: Orange colored types according to IEC 60282-1 dimensions.

Technical data on page 848

Ordering Code Numbers

rated voltage U_n [kV]	Dimension "e" according to DIN and IEC (mm)	rated current [A]	VVC Striker type 50N	VVT-D Striker type 80N THERMO	VVT-E Striker type 120N THERMO	Tube diameter "d" (mm)	weight [kg]
20/36	442	2 A	004265103	004266103	004267103	53	2.3
		4 A	004265104	004266104	004267104		
		6 A	004265105	004266105	004267105		
		10 A	004265106	004266106	004267106		
		16 A	004265107	004266107	004267107		
	537	2 A	004265003	004266003	004267003	53	2.8
		4 A	004265004	004266004	004267004		
		6 A	004265005	004266005	004267005		
		10 A	004265006	004266006	004267006		
		16 A	004265007	004266007	004267007		
		20 A	004265008	004266008	004267008		
		25 A	004265009	004266009	004267009	68	4.7
		32 A	004265010	004266010	004267010		
		40 A	004265011	004266011	004267011		
		50 A	004265012	004266012	004267012	85	7.0
		63 A	004265013	004266013	004267013		
		80A **	004265014	004266014	004267014		

** derating factor to take into consideration. Special parameters required.

Note 1: Other ratings and dimensions can be supplied by customer request. For particular applications, please contact ETI technical team.
Note 2: Orange colored types according to IEC 60282-1 dimensions.

High voltage fuse-links for liquid-immersed transformers

Ordering Code Numbers

rated voltage U_n [kV]	Dimension "e" according to DIN and IEC (mm)	rated current [A]	VVT-D Striker type 80N	Tube diameter "d" (mm)	weight [kg]
6/12	292	2A	004236903	53	1,6
		4A	004236904		
		6A	004236905		
		10A	004236906		
		16A	004236907		
		20A	004236908		
		25A	004236909		
		32A	004236910		
		40A	004236911		
10/24	292	2A	004256943	53	1,6
		4A	004256944		
		6A	004256945		
		10A	004256946		
		16A	004256947		
	442	2A	004256903	53	2,3
		4A	004256904		
		6A	004256905		
		10A	004256906		
		16A	004256907		
		20A	004256908		
		25A	004256909		
		32A	004256910		
		40A	004256911		

Technical data on page 849, 851

High voltage fuse-links for protection of voltage transformers

Ordering Code Numbers

rated voltage U_n [kV]	Dimension "e" according to DIN and IEC (mm)	rated current [A]	VVT-D	Tube diameter "d" (mm)	weight [kg]
10/24	235	2A	004251033	53	1,45
		4A	004251034		

Fuse bases for VV fuse-links

1-pole Indoor mounting

type	Rated voltage [kV]	code No.	Dimension "e" according to DIN and IEC [mm]	packaging [pcs]
VVP 7,2 1p-N	7,2	004229010	192	1
VVP 12 1p-N	12	004239010	292	1
VVP 17,5 1p-N	17,5	004249010	367	1
VVP 24 1p-N	24	004259010	442	1
VVP 36 1p-N	36	004269010	537	1

* when choosing right fuse base consider size and rated voltage of fuse-link
** due to safety reasons fuse bases cannot be later adjusted on different length by a user
*** indoor edition of fuse base may not be used for outside applications

1-pole Indoor mounting with microswitch fuse monitoring

type	Rated voltage [kV]	code No.	Dimension "e" according to DIN and IEC [mm]	packaging [pcs]
VVP 7,2 1p-N + NK 7,2 BSW	7,2	004349019	192	1
VVP 12 1p-N + NK 12 BSW	12	004349020	292	1
VVP 17,5 1p-N + NK 17,5 BSW	17,5	004349021	367	1
VVP 24 1p-N + NK 24 BSW	24	004349022	442	1
VVP 36 1p-N + NK 36 BSW	36	004349023	537	1

* when choosing right fuse base consider size and rated voltage of fuse-link
** due to safety reasons fuse bases cannot be later adjusted on different length by a user
*** Rotation in installation is allowed only with the pin striker pointing upward (as in the photo on the right)

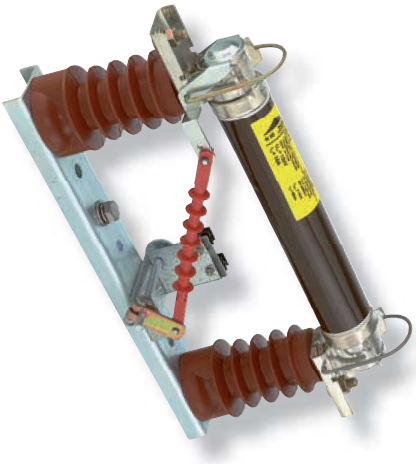

Technical data on page 851, 854

1-pole Outdoor mounting				
type	Rated voltage [kV]	code No.	Dimension "e" according to DIN and IEC [mm]	packaging [pcs]
VVP 12 1p-Z	12	004239030	292	1
VVP 24 1p-Z	24	004259030	442	1

* when choosing right fuse base consider size and rated voltage of fuse-link
** due to safety reasons fuse bases cannot be later adjusted on different length by a user

Accessories

Fixing plate
to obtain 3p fuse base (2 fixing plates are needed)

Microswitch

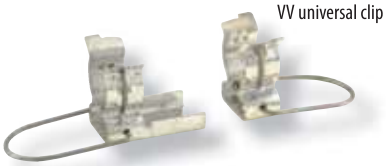

VV universal clip

VV universal clip with tail

Accessories for VVP fuse bases			
type	Rated voltage [kV]	code No.	packaging [pcs]
Fixing plate for VVP 7,2 3p-N, INDOOR	7,2	004229020	1
Fixing plate for VVP 12 3p-N, INDOOR	12	004239020	1
Fixing plate for VVP 17,5 3p-N, INDOOR	17,5	004249020	1
Fixing plate for VVP 24 3p-N, INDOOR	24	004259020	1
Fixing plate for VVP 36 3p-N, INDOOR	36	004269020	1
Fixing plate for VVP 12 3p-Z, OUTDOOR	12	004239040	1
Fixing plate for VVP 24 3p-Z, OUTDOOR	24	004259040	1
Microswitch NK 7,2 BSW, INDOOR	7,2	004349007	1
Microswitch NK 12 BSW, INDOOR	12	004349008	1
Microswitch NK 17,5 BSW, INDOOR	17,5	004349009	1
Microswitch NK 24 BSW, INDOOR	24	004349010	1
Microswitch NK 36 BSW, INDOOR	36	004349011	1
VV universal clip with tail, prepared for M10 screw connection	7,2 - 36	004349015	1
VV universal clip	7,2 - 36	004349016	1

Fixing plate is used for combining 1-pole fuse bases into 3-pole fuse bases.

Technical data on page 854

High-voltage high-breaking capacity VV fuse-links

Technical data

rated voltage [kV]	Dimension "e" according to DIN and IEC (mm)	rated current I_n [A]	Striker type	Rated breaking capacity (kA)	Rated minimum breaking current (A)	cold resistance [mΩ]	power dissipation [W]	pre-arcing I^2t value [A^2s]	total I^2t value [A^2s]
3/7.2	192	2 A	VVC, VVT-D, VVT-E	50	12	580	4	6,1	57
		4 A			20	370	9	17,3	164
		6 A			25	260	10	36	340
		10 A			46	55	7	161	1 530
		16 A			60	37	13	250	2 270
		20 A			80	30	15	430	3 750
		25 A			105	25	20	650	5 500
		32 A			130	18,5	28	1 120	10 100
		40 A			178	13	33	2 270	18 100
		50 A			220	8.5	26	6 270	31 300
		63 A			270	7.0	43	10 200	50 800
		80 A			360	5.2	50	18 700	93 500
		100 A			540	4.6	66	38 000	197 000
		125 A			610	3.4	101	61 500	319 000
		160 A			810	2,55	135	102 200	528 000
	292	2A	VVC, VVT-D, VVT-E	50	12	580	4	6,1	57
		4A			20	370	9	17,3	164
		6 A			25	260	10	36	340
		10 A			46	55	7	161	1 530
		16 A			60	37	13	250	2 270
		20 A			80	30	15	430	3 750
		25 A			105	25	20	650	5 500
		32 A			130	18,5	28	1 120	10 100
		40 A			178	13	33	2 270	18 100
		50 A			220	8.5	26	6 270	31 300
		63 A			270	7.0	43	10 200	50 800
		80 A			360	5.2	50	18 700	93 500
		100 A			540	4.6	66	38 000	197 000
		125 A			610	3.4	101	61 500	319 000
		160 A			810	2,55	135	102 200	528 000
		200 A			1000	2.1	155	151 780	789 270
		250 A			1250	1.7	196	228 610	1 188 800
	442	2A	VVC, VVT-D, VVT-E	50	12	840	4,7	6,1	57
		4A			20	530	11,7	17,3	164
		6A			25	270	13,4	36	340
		10A			46	67,5	9	161	1530
		16A			60	45,3	16	250	2270
		20A			80	38	20	430	3750
		25A			105	30	25	650	5500
		32A			130	22,5	31	1120	10100
		40A			178	16,2	35	2270	18100
		50A			220	10,5	39	6270	31300
		63 A			270	8.5	62	10 200	50 800
		80 A			360	6.5	77	18 700	93 500
		100 A			540	5.7	105	38 000	197 000
		125 A			610	4	115	61 500	319 000
		160 A			810	3.2	151	102 200	528 000
		200 A			1000	2.65	195	151 780	789 270
		250 A			1250	2.2	253	228 610	1 188 800
		315 A			1575	1.75	320	368 640	1 916 930

Technical data

rated voltage [kV]	Dimension "e" according to DIN and IEC (mm)	rated current I_n [A]	Striker type	Rated breaking capacity (kA)	Rated minimum breaking current (A)	cold resistance [mΩ]	power dissipation [W]	pre-arcing I^2t value [A^2s]	total I^2t value [A^2s]
6/12	192	2 A	VVC, VVT-D, VVT-E	50	12	980	6	6,1	57
		4 A			20	650	15	17,3	164
		6 A			27	435	21	36	340
		10 A			50	87	8	161	1 530
		16 A			80	60,5	19	250	2 270
		20 A			100	47	22	430	3 750
		25 A			125	37	34	650	5 500
		32 A			160	27	43	1220	10 100
		40 A			200	21	54	2 270	18 100
		50 A			250	14	44	6 270	31 300
	292	2 A	VVC, VVT-D, VVT-E	63	12	980	6	6,1	57
		4 A			20	650	15	17,3	164
		6 A			25	435	21	36	340
		10 A			46	87	8	161	1 530
		16 A			60	60,5	19	250	2 270
		20 A			80	47	22	430	3 750
		25 A			105	37	34	650	5 500
		32 A			130	27	43	1220	10 100
		40 A			178	21	54	2 270	18 100
		50 A			220	14	44	6 270	31 300
		63 A			270	10.5	65	10 200	50 800
		80 A			360	8	73	18 700	93 500
		100 A			540	7.3	109	38 000	197 000
		125 A			610	5.1	137	61 500	319 000
		160 A			810	4	189	102 200	528 000
	442	2 A	VVC, VVT-D, VVT-E	63	12	980	6	6,1	57
		4 A			20	650	15	17,3	164
		6 A			25	435	21	36	340
		10 A			46	87	8	161	1 530
		16 A			60	60.5	19	250	2 270
		20 A			80	47	22	430	3 750
		25 A			105	37	34	650	5 500
		32 A			130	27	43	1220	10 100
		40 A			178	21	54	2 270	18 100
		50 A			220	14	44	6 270	31 300
		63 A			270	10.5	65	10 200	50 800
		80 A			360	8	73	18 700	93 500
		100 A			540	7.3	109	38 000	197 000
		125 A			610	5.1	137	61 500	319 000
		160 A			810	4	189	102 200	528 000
		200 A			1000	3.3	238	151 780	789 270
	537	160 A	VVC, VVT-D, VVT-E	63	810	4	189	102 200	528 000
		200 A			1000	3.3	238	151 780	789 270
		250 A			1250	2.65	305	228610	1 188 800

Technical data

rated voltage [kV]	Dimension "e" according to DIN and IEC (mm)	rated current I_n [A]	Striker type	Rated breaking capacity (kA)	Rated minimum breaking current (A)	cold resistance [mΩ]	power dissipation [W]	pre-arcing I^2t value [A^2s]	total I^2t value [A^2s]
10/17.5	292	2 A	VVC, VVT-D, VVT-E	50	12	1400	8	6,1	57
		4 A			20	900	17	17,3	164
		6 A			27	670	35	36	340
		10 A			50	115	11	161	1 530
		16 A			80	82	28	250	2 270
		20 A			100	65	38	430	3 750
		25 A			125	54	45	650	5 500
		32 A			160	38	61	1220	10 100
		40 A			200	29	69	2 270	18 100
		50 A			250	19	63	6 270	31 300
		63 A			283	15	91	10 200	50 800
		80 A			400	11	118	18 700	93 500
		100A			550	9,4	158	38000	197000
	367	2 A	VVC, VVT-D, VVT-E	63	12	1400	8	6,1	57
		4 A			20	900	17	17,3	164
		6 A			25	670	35	36	340
		10 A			46	115	11	161	1 530
		16 A			60	82	28	250	2 270
		20 A			80	65	38	430	3750
		25 A			105	54	45	650	5500
		32 A			130	38	61	1220	10 100
		40 A			178	29	69	2 270	18 100
		50 A			220	19	63	6 270	31 300
		63 A			270	15	91	10 200	50 800
		80 A			360	11	118	18 700	93 500
		100 A			540	9.5	156	38 000	197 000
		125 A			610	6.8	193	61 500	319 000
		160 A			810	5.5	255	102 200	528 000
	442	2 A	VVC, VVT-D, VVT-E	63	12	1400	8	6,1	57
		4 A			20	900	17	17,3	164
		6 A			25	670	35	36	340
		10 A			46	115	11	161	1 530
		16 A			60	82	28	250	2 270
		20 A			80	65	38	430	3 750
		25 A			105	54	45	650	5 500
		32 A			130	38	61	1220	10 100
		40 A			178	29	69	2 270	18 100
		50 A			220	19	63	6 270	31 300
		63 A			270	15	91	10 200	50 800
		80 A			360	11	118	18 700	93 500
		100 A			540	9.5	156	38 000	197 000
		125 A			610	6.8	193	61 500	319 000

Technical data

rated voltage [kV]	Dimension "e" according to DIN and IEC (mm)	rated current I_n [A]	Striker type	Rated breaking capacity (kA)	Rated minimum breaking current (A)	cold resistance [mΩ]	power dissipation [W]	pre-arcing I^2t value [A^2s]	total I^2t value [A^2s]
10/24	292	2 A	VVC, VVT-D, VVT-E	31,5	12	2040	12	6,1	57
		4 A			20	1300	35	17,3	164
		6 A			27	900	56	36	340
		10 A			50	160	19	161	1 530
		16 A			80	106	35	250	2 270
		20 A			100	85	44	430	3 750
		25 A			125	67	58	650	5 500
		32 A			160	48	71	1220	10 100
		40 A			200	37.5	95	2 270	18 100
		50 A			250	25	81	6 270	31 300
		63A			283	20	120	10 200	50 800
	442	2 A	VVC, VVT-D, VVT-E	63	12	2040	12	6,1	57
		4 A			20	1300	35	17,3	164
		6 A			25	900	56	36	340
		10 A			46	160	19	161	1 530
		16 A			60	106	35	250	2 270
		20 A			80	85	44	430	3 750
		25 A			105	67	58	650	5 500
		32 A			130	48	71	1220	10 100
		40 A			178	37.5	95	2 270	18 100
		50 A			220	25	81	6 270	31 300
		63A			270	20	120	10 200	50 800
		80 A			360	15	157	18 700	93 500
		100 A			540	13.8	235	38 000	197 000
		125 A			610	9.6	304	61 500	319 000
	537	2 A	VVC, VVT-D, VVT-E	63	12	2040	12	6,1	57
		4 A			20	1300	35	17,3	164
		6 A			25	900	56	36	340
		10 A			46	160	19	161	1 530
		16 A			60	106	35	250	2 270
		20 A			80	85	44	430	3 750
		25 A			105	67	58	650	5 500
		32 A			130	48	71	1220	10 100
		40 A			178	37.5	95	2 270	18 100
		50 A			220	25	81	6 270	31 300
		63A			270	20	120	10 200	50 800
		80 A			360	15	157	18 700	93 500
		100 A			540	13.8	235	38 000	197 000
		125 A			610	9.6	304	61 500	319 000
		160 A			810	8	410	74 650	388 180

Technical data

rated voltage [kV]	Dimension "e" according to DIN and IEC (mm)	rated current I_n [A]	Striker type	Rated breaking capacity (kA)	Rated minimum breaking current (A)	cold resistance [mΩ]	power dissipation [W]	pre-arcing I^2t value [A^2s]	total I^2t value [A^2s]
20/36	442	2 A	VVC, VVT-D, VVT-E	20	12	2900	17	6,1	57
		4 A			20	1870	45	17,3	164
		6 A			27	1300	73	36	340
		10 A			50	225	28	161	1 530
		16 A			80	150	53	250	2 270
	537	2 A	VVC, VVT-D, VVT-E	31,5	12	2900	17	6,1	57
		4 A			20	1870	45	17,3	164
		6 A			25	1300	73	36	340
		10 A			46	225	28	161	1 530
		16 A			60	150	53	250	2 270
		20 A			80	122	74	430	3 750
		25 A			105	95	87	650	5 500
		32 A			130	69	111	1 220	10 100
		40 A			178	52	139	2 270	18 100
		50 A			220	35	125	6 270	31 300
		63 A			270	28	185	10 200	50 800
		80 A**			360	21	213	18 700	93 500

Force / travel striker pin diagram

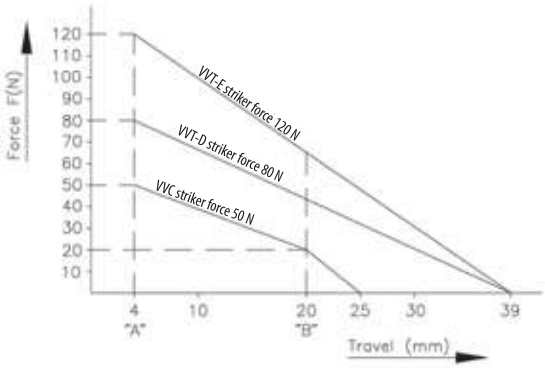

Connection in indoor switchgear, example:

Cut-off current diagram for VV-Thermo fuse links

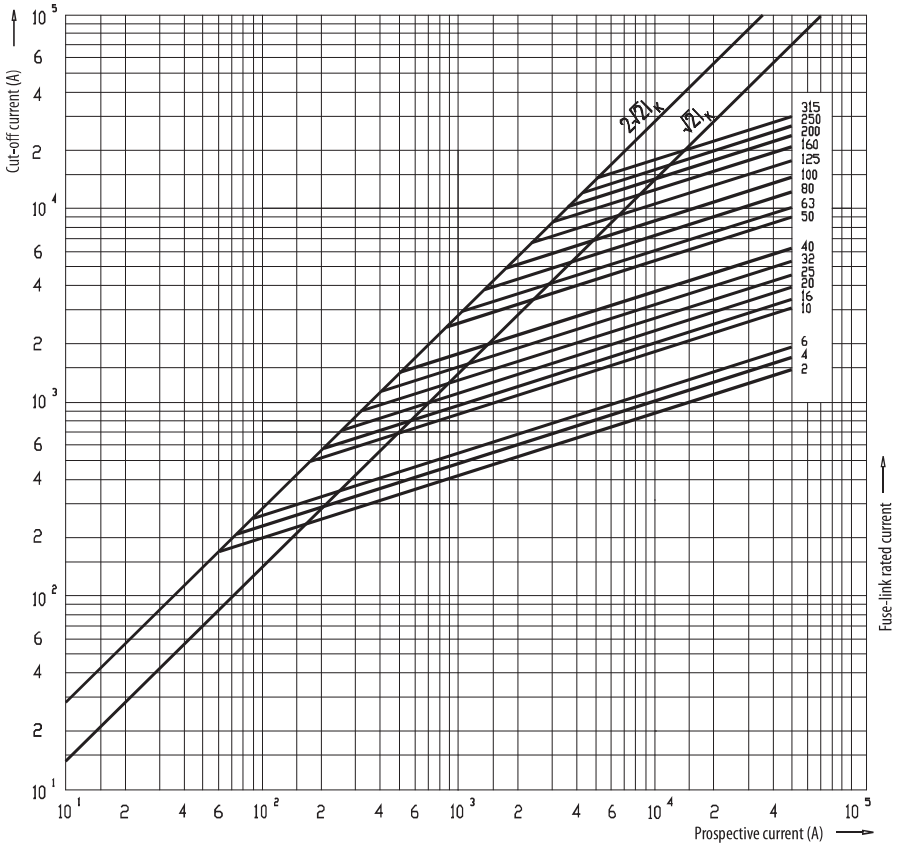

Time-current characteristics for VV-thermo fuse links

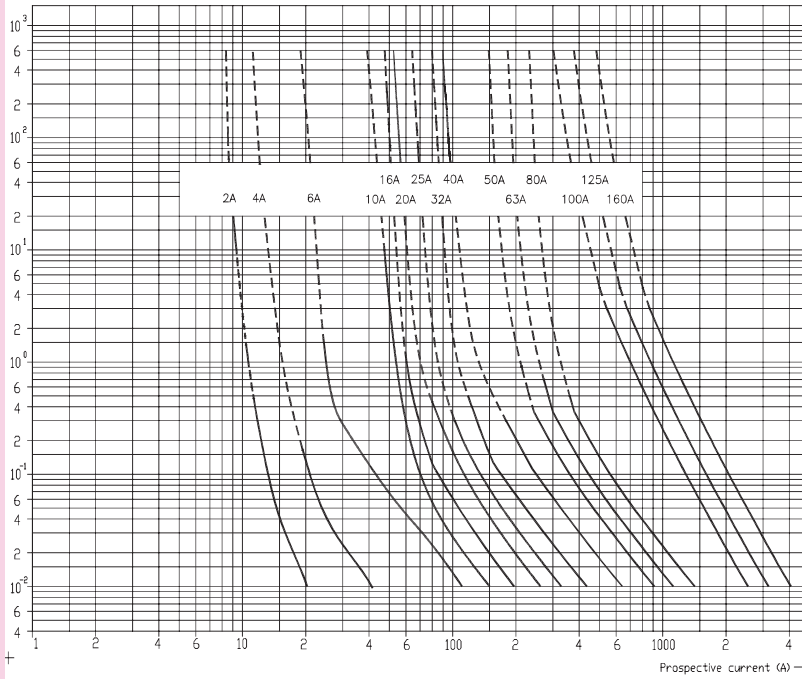

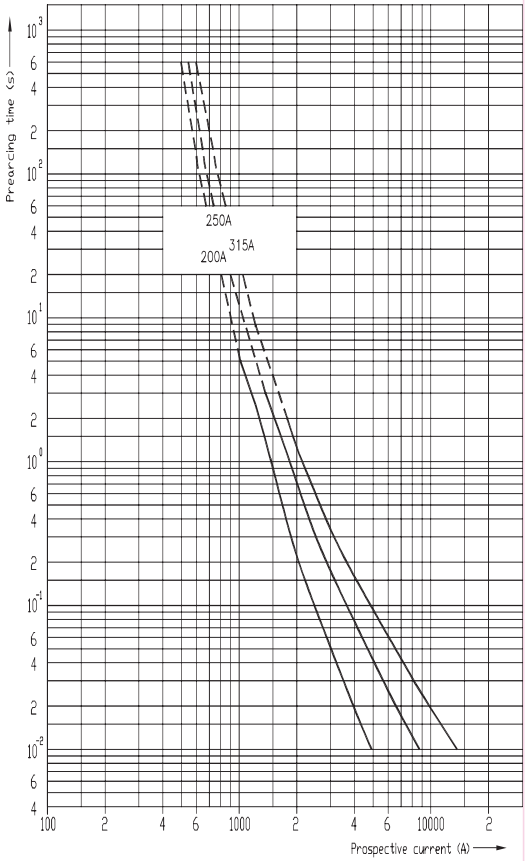

High voltage fuse-links for liquid-immersed transformer protection

Technical data

rated voltage [kV]	Dimension "e" according to DIN and IEC (mm)	rated current I_n [A]	Striker type	Rated breaking capacity (kA)	Rated minimum breaking current (A)	cold resistance [mΩ]	power dissipation [W]	pre-arcing I^2t value [A^2s]	total I^2t value [A^2s]
6/12	292	2A	VVT-D	50	12	980	6	6,1	57
		4A			20	650	15	17,3	164
		6A			25	435	21	36	340
		10A			46	87	8	161	1530
		16A			60	60,5	19	250	2270
		20A			80	47	22	430	3750
		25A			105	37	34	650	5500
		32A			130	27	43	1220	10100
		40A			178	21	54	2270	18100
10/24	292	2A	VVT-D	50	12	2040	12	6,1	57
		4A			20	1300	35	17,3	164
		6A			25	900	56	36	340
		10A			46	160	19	161	1530
		16A			60	106	35	250	2270
	442	2A	VVT-D	50	12	2040	12	6,1	57
		4A			20	1300	35	17,3	164
		6A			25	900	56	36	340
		10A			46	160	19	161	1530
		16A			60	106	35	250	2270
		20A			80	85	44	430	3750
		25A			105	67	58	650	5500
		32A			130	48	71	1220	10100
		40A			178	37,5	95	2270	18100

Time-current characteristics

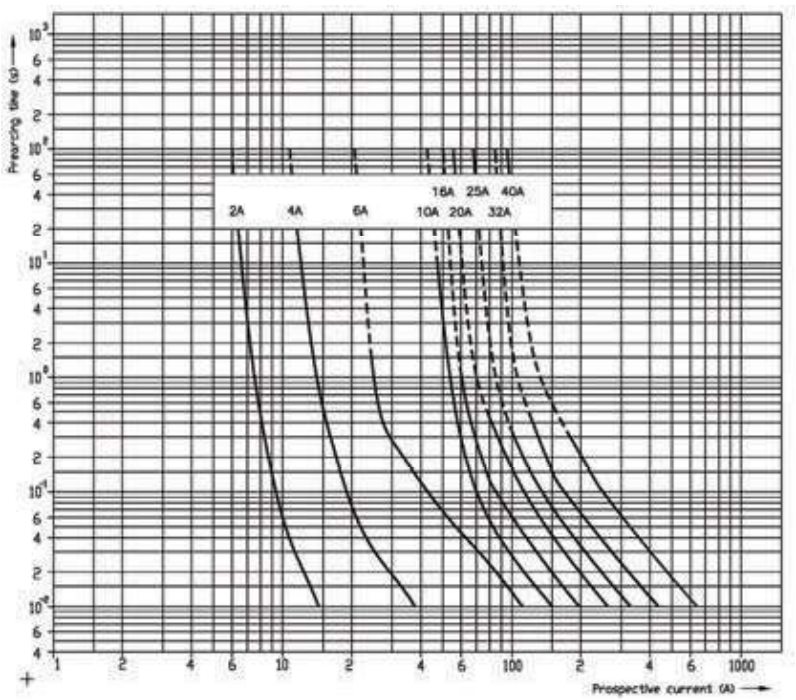

High voltage fuses for protection of voltage transformers

Technical data

rated voltage [kV]	Dimension "e" according to DIN and IEC (mm)	rated current I_n [A]	Striker type	Rated breaking capacity (kA)	Rated minimum breaking current (A)	cold resistance [mΩ]	power dissipation [W]	pre-arcing I^2t value [A^2s]	total I^2t value [A^2s]
10/24	235	2A	/	20	12	2040	14	6,1	57
		4A			20	1300	38	17,3	164

Selection of fuses for transformer protection

For HV fuse-link rated current selection, following transformer technical features has to be known:

- Rated power P_n (kVA)
- Short-circuit voltage U_{cc} (%)
- Rated current I_{nt}
- Inrush current usually between 8-12xI_{nt}
- Short-circuit current I_{cc}
- Overload current usually 1.4 I_{nt}
- Maximum short-circuit duration. Standard 2 sec for transformers up to 630 kVA and 3 sec for higher rated powers

Following HV fuse-link technical features has to be known:

- Rated voltage U_n (kV)
- Rated current I_n (A)
- I/t Characteristics According to the curves
- Melting current (0.1sec) $I_{f\ (0.1sec)}$
- Melting current at 2s ec or 3sec melting time
- Minimum breaking current I_3 (A)
- Breaking capacity I_1 (kA)

General about transformer protection:

- Fuse-link rated voltage U_n must be higher then network voltage.
- Maximum fuse-link breaking current I_1 must be higher then short circuit-current Icc.
- Inrush current should not melt the fuse-link. Melting current at 100 msec must be higher than 12 times transformer rated current
- Fuse-link has to operate before the expected short-circuit current damage the transformer Icc > I_f (2 sec) or Icc > I_f (3 sec)
- Fuse-link must be able to withstand possible short duration overloads. I_n FUSE > 1.4 I_n TRAFO

Selection table for VV - THERMO back-up fuse links

Pt (kVA)	6/7,2 kV					10/12 kV					15/17.5kV				
	Transformer rated primary current Ip(A) at 6 kV	Inrush current (A)	HV Fuse-link rated current		LV Fuse-Link NH gG	Transformer rated primary current Ip(A) at 10 kV	Inrush current (A)	HV Fuse-link rated current		LV Fuse-Link NH gG	Transformer rated primary current Ip(A) at 15 kV	Inrush current (A)	HV Fuse-link rated current		LV Fuse-Link NH gG
			I_{HV} min (A)	I_{HV} max (A)	I_{LV} (A)			I_{HV} min (A)	I_{HV} max (A)	I_{LV} (A)			I_{HV} min (A)	I_{HV} max (A)	I_{LV} (A)
50	5	58	10	16	63	3	35	6	10	63	2	23	6	10	63
75	7	86	16	20	100	4	52	10	16	100	3	35	6	10	100
100	10	115	25	32	125	6	70	10	16	125	4	46	10	16	125
125	12	145	32	40	160	7	86	16	20	160	5	58	10	16	160
160	15	185	40	50	200	9	110	20	25	200	6	74	16	20	200
200	19	230	40	50	250	12	138	25	32	250	8	92	20	25	250
250	24	289	50	63	315	14	173	32	40	315	10	115	25	32	315
315	30	364	50	63	400	18	218	40	50	400	12	145	32	40	400
400	39	462	63	80	500	23	276	50	63	500	15	185	40	50	500
500	48	577	80	100	630	29	346	50	63	630	19	230	40	50	630
630	61	727	100	125	800	36	437	63	80	800	24	293	50	63	800
800	77	923	100	125	1000	46	554	80	100	1000	31	370	63	80	1000
1000	96	1154	125	160	1250	58	692	100	125	1250	38	462	80	100	1250
1250	120	1440	160	200*	1250	72	866	100	125	1250	48	577	100	125	1250
1600	154	1848	200*	250*	1500	92	1109	125	160	1500	62	739	125	160	1500
2000	192	2310	250*	315*	1600	115	1380	160	200*	1600					

* Note: nonstandard tube dimension

Selection table for VV - THERMO back-up fuse links

Pt (kVA)	20/24 kV					30/36 kV				
	Transformer rated primary current Ip(A) at 20 kV	Inrush current (A)	HV Fuse-link rated current		LV Fuse-Link NH gG	Transformer rated primary current Ip(A) at 30 kV	Inrush current (A)	HV Fuse-link rated current		LV Fuse-Link NH gG
			I_{HV} min (A)	I_{HV} max (A)	I_{LV} (A)			I_{HV} min (A)	I_{HV} max (A)	I_{LV} (A)
50	1	18	4	6	63	1	12	2	4	63
75	2	26	4	6	100	1	17	4	6	100
100	3	35	6	10	125	2	23	6	10	125
125	4	43	6	10	160	2	29	6	10	160
160	5	55	10	16	200	3	37	6	10	200
200	6	70	10	16	250	4	46	10	16	250
250	7	86	16	20	315	5	58	10	16	315
315	9	109	20	25	400	6	73	16	20	400
400	12	138	25	32	500	8	92	20	25	500
500	14	173	32	40	630	10	115	20	25	630
630	18	217	40	50	800	12	145	25	32	800
800	23	277	50	63	1000	15	185	40	50	1000
1000	29	346	50	63	1250	19	230	50	63	1250

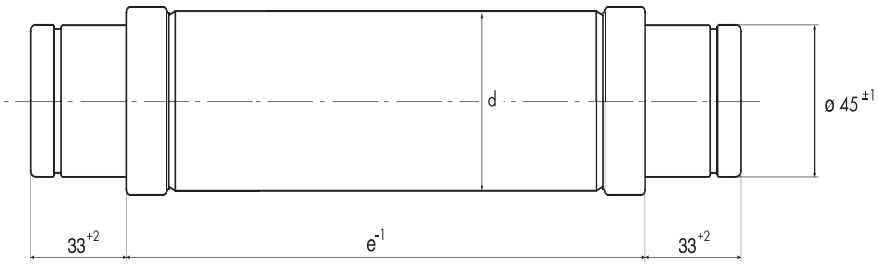

1-pole fuse-base	Rated voltage [kV]	A [mm]	B [mm]	C [mm]	D [mm]	E [mm]	F [mm]	"e" Fuse length	Version
INDOOR MOUNTING	7,2	445	405	225	152	195	250	192	V1
	12	545	505	322	152	195	250	292	V1
	17,5	480	280	397	172	215	270	367	V2
	24	555	355	475	202	245	300	442	V2
	36	670	350	570	302	345	400	537	V2

V1

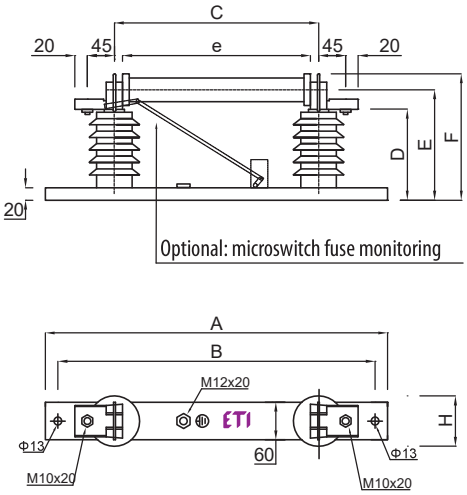

V2

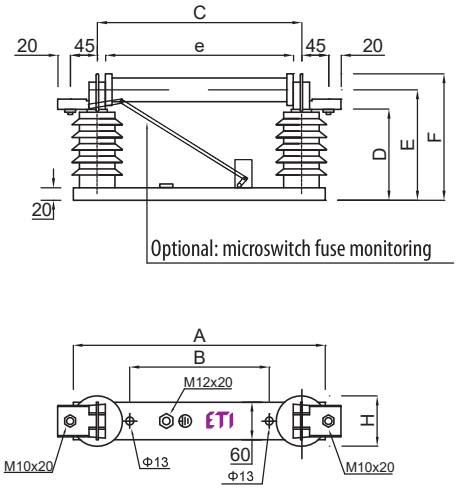

internal fuse base

1-pole fuse-base	Rated voltage [kV]	A [mm]	B [mm]	C [mm]	D [mm]	E [mm]	F [mm]	"e" Fuse length	Version
OUTDOOR MOUNTING	12	405	205	330	310	370	420	292	V3
	24	555	355	475	310	370	420	442	V3

V3

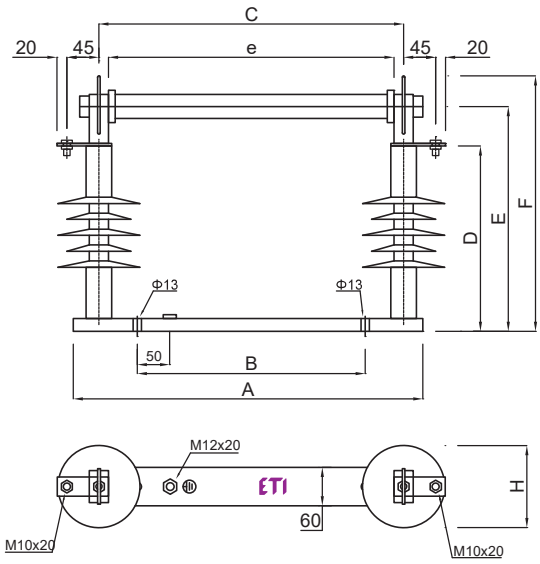

external fuse base

Definitions and terms

Back-up fuse-links
According to standard IEC 60282-1 Fifth edition (2002-01), item 3.3.3, Back-up fuse is current-limiting fuse capable of breaking, under specified conditions of use and behaviour, all currents from the rated maximum breaking current (I_1) down to the rated minimum breaking current (I_3).
Back-up fuse links should not operate below theirs minimum breaking current. If the short-circuit current of the transformer is lower than the minimum breaking current, additional protection must be provided.

Rated voltage range voltages
ETI VV Thermo fuse-links must be operated at the rated voltage. At lower operating voltages without limitation provided, please contact ETI team.

Breaking capacity I_1
This value (sometimes named "rated maximum breaking current" of current indicates, that this is the maximum current which can be interrupted by the fuse-link. I_1 should be greater than the maximum expected short circuit current at the fuse-link site.

Minimum breaking current I_3
This value (sometimes named "rated minimum breaking current" is specified for Back-up fuse-links. Up from this current, fuse-link is capable to breaking fault current.

Power dissipation of a fuse-link P_n
The power dissipation of a VV Thermo fuse-link is specified at the rated current of the fuse-link. For calculations of protection with VV Thermo fuse-link, it should be noted, that operating current is normally below half of the rated current.

Time-current characteristics
I/t characteristics represents the correlation between current and time up to the melting of a silver fuse element. For coordination with other protection devices, melting integral must be referred for melting times below 100ms.

Current limitation
This is most significant advantage of fuse-links compared to mechanical switches. Contacts of that switches need much longer time as fuse-link to interrupt fault currents. VV fuse-link interrupt fault current within few milliseconds and sinusoidal current does not reach its peak value.

Switching voltages
Between current-limiting process, short circuit current must be limited and reduced as soon as possible. This require a switching voltage that exceed the normal system voltage and force the current to zero.
Permissible value of switching voltage is 2.2 times peak value of the maximum rated voltage.